TECO	OUTLINE DIMENSIONS 3-PHASE INDUCTION MOTOR	FRAME NO : D80

POLE	kW	HP	RPM
2	0.70	0.94	2850
2	0.75	1.00	2880
2	1.10	1.50	2880
4	0.55	0.74	1400
4	0.70	0.94	1400
4	0.75	1.00	1410
6	0.37	0.50	910
6	0.55	0.74	910

Totally Enclosed Fan-Cooled Type. Squirrel-Cage Rotor.

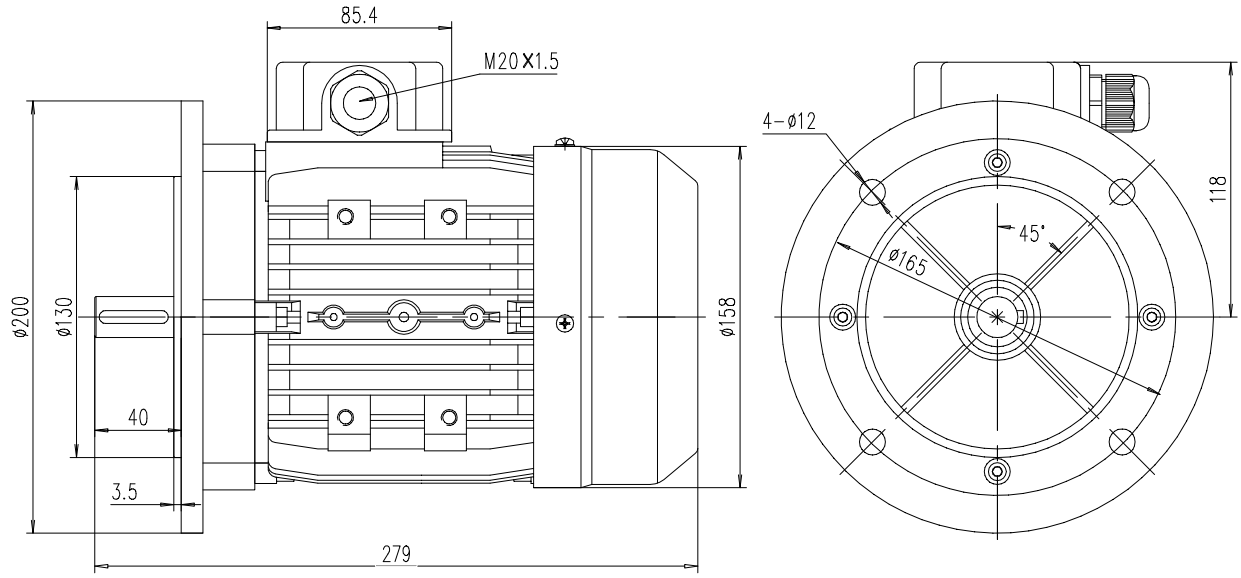

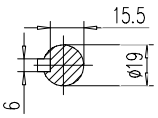

NOTES:
1. DIMENSIONS IN mm.
2. SCALE 1: 3.5.
3. FLANGE MOUNTED IM3001.
4. FOR DIRECT DRIVE ONLY.
5. IP55 PROTECTION.

MAX ALLOY

DWN.	DP	16.12.24	REV : 00
CHKD.	AN	16.12.24	
APPD.	JC	16.12.24	